Current Requirements for Swimming Pools Contained in the Uniform Fire Prevention and Building Code (Uniform Code)

April 2011

Introduction

The State Uniform Fire Prevention and Building Code (the "Uniform Code") is promulgated by the State Fire Prevention and Building Code Council (the "Code Council") pursuant to Article 18 of the Executive Law. The Uniform Code includes provisions contained in Parts 1219 to 1228 of Title 19 of the New York Code, Rules and Regulations (the "NYCRR") and the provisions contained in the publications that are mentioned in Parts 1220 to 1227. Those publications include the 2010 editions of the Residential Code of New York State, the Building Code of New York State, the Plumbing Code of New York State, the Mechanical Code of New York State, the Fuel Gas Code of New York State, the Fire Code of New York State, the Property Maintenance Code of New York State, and the Existing Building Code of New York.

The Uniform Code includes a number of provisions relating to swimming pools. This document is intended to summarize the requirements for swimming pools currently found in the Uniform Code.

Please note that local laws regarding fencing and other safety requirements for swimming pools may be more restrictive than requirements for swimming pools contained in the Uniform Code. If you are considering the purchase of a swimming pool, you should review the Uniform Code provisions summarized in this document and, in addition, you should consult the local laws, ordinances, codes and regulations of the municipality where the pool is to be installed for any further requirements

Definition of "Swimming Pool"

The term "swimming pool" is defined in the Uniform Code as "any structure, basin, chamber or tank which is intended for swimming, diving, recreational bathing or wading and which contains, is designed to contain, or is capable of containing water more than 24 inches (610 mm) deep at any point. This includes in-ground, above-ground and on-ground pools; indoor pools; hot tubs; spas; and fixed-in-place wading pools."[1]

NOTE: A pool which is capable of containing more that 24 inches of water is a "swimming pool" (and is subject to all applicable Uniform Code provisions relating to "swimming pools") even if the pool is filled to a depth of less than 24 inches.

Barrier Requirements: Outdoor Residential Swimming Pools

An outdoor residential swimming pool must be provided with a barrier which completely surrounds the swimming pool and obstructs access to the swimming pool. The barrier may consist of a fence, a wall, a building wall, or any combination thereof.[2] The barrier must be at least 4 feet (48 inches) high, and must satisfy certain specified requirements (which are discussed in more detail below).

Access gates must satisfy the requirements applicable to barriers, as well as certain additional requirements (which are discussed in more detail below). In addition, access gates must be securely locked with a key, combination or other child-proof lock sufficient to prevent access to the swimming pool through such gate when the swimming pool is not in use or supervised.

NOTE: In general, the barrier requirements discussed in this document apply to all swimming pools, without regard to the date of construction or installation of the pool. [3]

NOTE: As mentioned above, the definition of "swimming pool" includes hot tubs and spas. However, a hot tub or spa with a safety cover that complies with reference standard ASTM F 1346, entitled Standard Performance Specification for Safety Covers and Labeling Requirements for All Covers for Swimming Pools, Spas and Hot Tubs, is exempt from the barrier requirements discussed here.

NOTE: The principal purpose of the Uniform Code's barrier requirements is to make swimming pools inaccessible to young children. The specific requirements discussed below are intended to prevent a child from crawling under the barrier, fitting through the barrier, or climbing over the barrier. The requirements for access gates are intended to prevent a child from opening an access gate.

Barriers provided for outdoor residential swimming pools must satisfy the following requirements:

- The barrier must completely surround the swimming pool and must obstruct access to the swimming pool.
- The barrier must be at least 4 feet (48 inches) high.
- The space between the bottom of the barrier and the ground cannot exceed 2 inches.
- In the case of an above-ground pool, the barrier may be at ground level or mounted on top of the pool structure; however, if the barrier is mounted on top of the pool structure, the space between the top of the pool structure and the bottom of the barrier cannot exceed 4 inches. See Figure 3109.4.1 on Page 3.
- Any opening in the barrier must be small enough to prevent the passage of a 4-inch-diameter sphere through the opening. See Figure 3109.4.1.1 on Page 3.

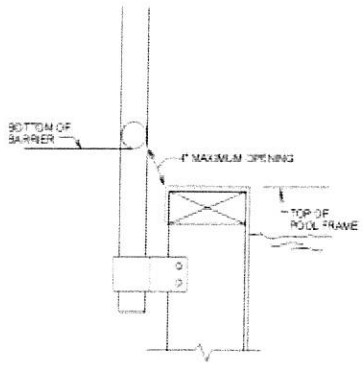

For SI: 1 inch = 25.4 mm.

Figure 3109.4.1
OPENING LIMITATIONS

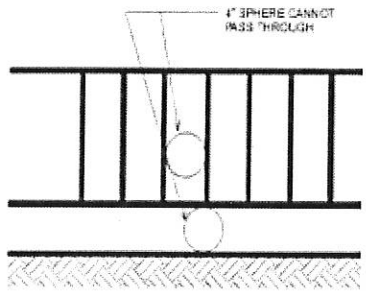

For SI: 1 inch = 25.4 mm.

Figure 3109.4.1.1
BARRIER OPENINGS

- A barrier that does not have openings, such as a masonry or stone wall, cannot contain indentations or protrusions (except for normal construction tolerances and tooled masonry joints).
- Where the barrier is composed of horizontal and vertical members and the distance between the tops of the horizontal members is less than 45 inches:
    - the horizontal members must be located on the swimming pool side of the fence;
    - the spacing between vertical members cannot exceed 1.75 inches; and
    - the spacing within any decorative cutouts in vertical members cannot exceed 1.75 inches. See Figure 3109.4.1.3 below.
- Where the barrier is composed of horizontal and vertical members and the distance between the tops of the horizontal members is 45 inches or more:
    - the spacing between vertical members cannot exceed 4 inches; and
    - the spacing within any decorative cutouts in vertical members cannot exceed 1.75 inches. See Figure 3109.4.1.3 below.

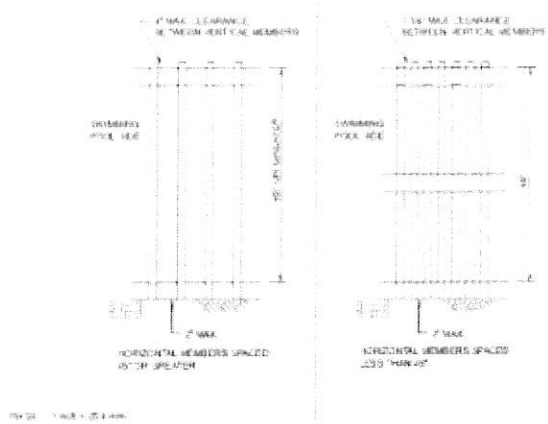

Figure 1109.4.1.3
PRIVATE SWIMMING POOL BARRIER CONSTRUCTION

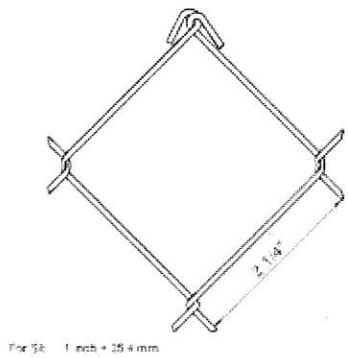

For SI: 1 inch = 25.4 mm.

Figure 3109.4.1.6
CHAIN-LINK FENCE MESH FOR PRIVATE SWIMMING POOLS

The figures on this page appear with the permission of the International Code Council. These figures may not be reproduced without the express written consent of the International Code Council.

- If a chain link fence is used as the barrier, the mesh size cannot exceed 2.25-inch square unless the fence is provided with slats fastened at the top or the bottom which reduce the openings to not more than 1.75 inches. See Figure 3109.4.1.6 above.
- Where the barrier is composed of diagonal members, such as a lattice fence, the opening formed by the diagonal members cannot exceed 1.75 inches.
- Access gates must satisfy the requirements stated above, and with the following additional requirements:
    - All gates must be self-closing.
        - In addition, if the gate is a pedestrian access gate, the gate must open outward, away from the pool.
    - All gates shall be self-latching, with the latch handle located within the enclosure (i.e, on the pool side of the enclosure) and at least 40 inches (1016 mm) above grade.
        - In addition, if the latch handle is located less than 54 inches (1372 mm) from the bottom of the gate, the latch handle shall be located at least 3 inches (76 mm) below the top of the gate, and neither the gate nor the

barrier shall have any opening greater than 0.5 inch (12.7 mm) within 18 inches (457 mm) of the latch handle.

- All gates shall be securely locked with a key, combination or other child proof lock sufficient to prevent access to the swimming pool through such gate when the swimming pool is not in use or supervised.

- A building wall can form part of the required barrier. However, where a wall of a dwelling serves as part of the barrier, at least one of the following requirements must be satisfied:
  - the pool must be equipped with a powered safety cover in compliance with reference standard ASTM F1346, entitled Standard Performance Specification for Safety Covers and Labeling Requirements for All Covers for Swimming Pools, Spas and Hot Tubs; or
  - all doors with direct access to the pool through that wall must be equipped with an alarm which:

    1. produces an audible warning when the door and its screen, if present, are opened,
    2. sounds continuously for a minimum of 30 seconds immediately after the door is opened,
    3. is capable of being heard throughout the house during normal household activities,
    4. automatically resets under all conditions, and
    5. is equipped with a manual means, such as touchpad or switch, to deactivate the alarm temporarily for a single opening (such deactivation cannot last for more than 15 seconds, and the deactivation switch[es] must be located at least 54 inches above the threshold of the door); or
  - other means of protection, such as self-closing doors with self-latching devices, which are approved by the governing body and which afford a degree of protection not less than the protection afforded by the powered safety cover and door alarm described above, must be provided.

- In the case of an above-ground pool, the pool structure itself can serve as a part of the required barrier, provided that the pool structure is sufficiently rigid to obstruct access to the pool. However, where an above-ground pool structure is used as a barrier or where the barrier is mounted on top of the pool structure, and the means of access is a ladder or steps, then:
  - the ladder or steps shall be capable of being secured, locked or removed to prevent access, or the ladder or steps shall be surrounded by a complying swimming pool barrier ;
  - when the ladder or steps are secured, locked or removed, any opening created shall not allow the passage of a 4-inch-diameter sphere.

- Barriers shall be located so as to prohibit permanent structures, equipment or similar objects from being used to climb the barriers.

Barrier Requirements: Indoor Residential Swimming Pools

All walls surrounding an indoor residential swimming pool must comply with the above-stated requirements for building walls used as all or part of a barrier around an outdoor residential swimming pool. [4]

Barrier Requirements: Public Swimming Pools

A public swimming pool must be completely enclosed by a fence at least 4 feet in height or a screen enclosure. Openings in the fence must not permit the passage of a 4-inch diameter sphere. The fence or screen enclosure must be equipped with self-closing and self-latching gates.[5]

See also Section 302.7.2.1 of the *Property Maintenance Code of New York State*, which provides that an approved enclosure, at least 4 feet in height, must be provided around outdoor swimming pools, so that such pools are inaccessible to children. The enclosure may surround either the pool area or the property.

NOTE: The State Sanitary Code (10 NYCRR Chapter 1) is a regulation promulgated by the New York State Department of Health. Subpart 6-1 of the State Sanitary Code applies to all swimming pools except:

(1) a swimming pool "owned and/or maintained by an individual for the use of his family and friends;

(2) spa pools used under medical supervision or associated with hospitals; and

(3) float tank or relaxation tank used for solitary body immersion in skin-temperature salt water."

Therefore, Subpart 6-1 applies to most "public" swimming pools. If a swimming pool is subject to the provisions of Subpart 6-1 of the State Sanitary Code, then:

- The pool must be enclosed within a fence or other barrier, at least four feet high, which can only be entered by bathers through self-closing and positive self-latching doors or gates;
- the knob or handle controlling the latch must be at least 40 inches above grade;
- the gate or door must be locked, and access to pool prevented, when the pool is not supervised;
- swimming pool fences constructed after the effective date of Subpart 6-1 (March 30, 1988) must meet the requirements of the Uniform Code; and
- in the case of a swimming pool fence constructed prior to March 30, 1988, no opening shall exceed four inches.

Temporary Pool Enclosures [6]

During the installation or construction of a swimming pool, the swimming pool must be enclosed by a temporary enclosure. The temporary enclosure may consist of a temporary fence, a

permanent fence, the wall of a permanent structure, any other structure, or any combination of the foregoing. However:

- all portions of the temporary enclosure must be at least four(4) feet high, and
- all components of the temporary enclosure must be sufficient to prevent access to the swimming pool by any person not engaged in the installation or construction process and to provide for the safety of all such persons.

The temporary enclosure must remain in place throughout the period of installation or construction of the swimming pool, and thereafter until the installation or construction of a permanent enclosure has been completed. The temporary enclosure must be replaced by a permanent enclosure. The permanent enclosure must comply with all applicable "Barrier Requirements" described at pages 2 to 7 of this publication, and with any additional requirements that may be imposed by any other New York State codes or regulations applicable to swimming pool enclosures or by any local law applicable to swimming pool enclosures and in effect in the location where the swimming pool has been installed or constructed.

The permanent enclosure must be completed within ninety days after the date of issuance of the building permit for the installation or construction of the swimming pool, or the date of commencement of the installation or construction of the swimming pool, whichever is later. (If the swimming pool is installed or constructed without the issuance of a building permit, the permanent enclosure must be completed within ninety days after the date of commencement of the installation or construction of the swimming pool - note, however, that this provision does not permit the installation or construction of a pool without a building permit where such a permit is required by applicable law.) The local code enforcement official has authority to extend the 90 day period for completion of the permanent enclosure for good cause, such as a delay in construction caused by bad weather.

Pool Alarm Requirements [7]

Every swimming pool that is installed, constructed or substantially modified after December 14, 2006 must be equipped with an approved pool alarm which:

- is capable of detecting a child entering the water and giving an audible alarm when it detects a child entering the water;
- is audible poolside and at another location on the premises where the swimming pool is located;
- is installed, used and maintained in accordance with the manufacturer's instructions;
- is classified to reference standard ASTM F2208, entitled *Standard Specification for Pool Alarms* (either the version adopted in 2002 and editorially corrected in June 2005, or the version adopted in 2007); and
- is not an alarm device which is located on person(s) or which is dependent on device(s) located on person(s) for its proper operation.

A pool alarm must be capable of detecting entry into the water at any point on the surface of the swimming pool. If necessary to provide detection capability at every point on the surface of the swimming pool, more than one pool alarm must be installed.

Pool alarms are not required in:

- a hot tub or spa equipped with a safety cover classified to reference standard ASTM F1346 (2003), entitled *Standard Performance Specification for Safety Covers and Labeling Requirements for All Covers for Swimming Pools, Spas and Hot Tubs*, or
- any swimming pool (other than a hot tub or spa) equipped with an automatic power safety cover classified by to reference standard ASTM F1346 (2003).

Entrapment Protection Requirements [8]

- Suction outlets must be designed to produce circulation throughout the pool or spa.
- Single outlet systems, such as automatic vacuum cleaner systems, or other such multiple suction outlets whether isolated by valves or otherwise must be protected against user entrapment.
- All pool and spa suction outlets (except surface skimmers) must be provided with:
    - a cover that conforms with reference standard ASME/ANSI A112.19.8M, entitled *Suction Fittings for Use in Swimming Pools, Wading Pools, Spas, Hot Tubs, and Whirlpool Bathtub Appliances*, or
    - a drain gate that is 12" × 12" or larger, or
    - a channel drain system approved by the local code enforcement official.
- All pool and spa single or multiple outlet circulation systems must be equipped with atmospheric vacuum relief should grate covers located therein become missing or broken. Such vacuum relief systems shall include at least one the following:
    - safety vacuum release system conforming to reference standard ASME A112.19.17, entitled *Manufacturers Safety Vacuum Release Systems (SVRS) for Residential and Commercial Swimming Pool, Spa, Hot Tub and Wading Pool*, or
    - a gravity drainage system approved by the local code enforcement official.
- Single or multiple pump circulation systems must be provided with a minimum of two (2) suction outlets of the approved type.
- The suction outlets must be separated by a minimum horizontal or vertical distance of three (3) feet.
- These suction outlets must be piped so that water is drawn through them simultaneously through a vacuum relief-protected line to the pump or pumps.
- If the pool or spa is equipped with vacuum or pressure cleaner fitting(s), each fitting must be located:
    - in an accessible position which is at least six (6) inches and not greater than twelve (12) inches below the minimum operational water level, or
    - as an attachment to the skimmer(s).

Design and Construction Requirements

In-ground pools must be designed and constructed in conformance with reference standard ANSI/NSPI-5, entitled *Standard for Residential In-ground Swimming Pools.*[9]

Above-ground and on-ground pools must be designed and constructed in conformance with reference standard ANSI/NSPI-4, entitled *Standard for Above-ground/On-ground Residential Swimming Pools.*[10]

NOTE: A "public" swimming pool that is subject to Subpart 6-1 of the State Sanitary Code must comply with the design standards and construction provisions of Subpart 6-1.

Maintenance Requirements

The *Property Maintenance Code of New York State* provides that swimming pools must be maintained in a clean and sanitary condition, and in good repair.[11]

NOTE: A "public" swimming pool that is subject to Subpart 6-1 of the State Sanitary Code must comply with the operation, supervision and maintenance provisions of Subpart 6-1.

Other Requirements

Many other technical requirements are covered by the Uniform Code:

- **Safety glazing material** is required in the walls and fences enclosing indoor and outdoor swimming pools where certain conditions are met. See *Building Code of New York State* Section 2406.2.9.

- **Support provisions for membrane structures**: see *Building Code of New York State* Section 3102.8.3.

- **Recirculation of supply air** to a swimming pool and associated deck areas: see *Mechanical Code of New York State* Section 403.2.1.2.

- Regulation of **solar heating systems**: see *Mechanical Code of New York State* Section 1401.

- Swimming pools shall be **protected against backflow** in accordance with *Plumbing Code of New York State* Section 608. See *Plumbing Code of New York State* Section 423.1.

- Where **waste water from swimming pools**, backflow from filters and water from pool deck drainsdischarge to the building drainage system, the discharge must be through an indirect waste pipe via an air gap. See *Plumbing Code of New York State* Section 802.1.4.

- **Suction fittings for use in swimming pools** shall comply with reference standard ASME/ANSI A112.19.8M, entitled *Suction Fittings for Use in Swimming Pools, Wading Pools, Spas, Hot Tubs, and Whirlpool Bathtub Appliances*. See *Residential Code of New York State* Section 2701.1.

- The installation of **electric wiring and equipment associated with swimming pools**, wading pools, hot tubs and spas, and hydromassage bathtubs, whether permanently installed or storable, and metallic auxiliary equipment, such as pumps, filters and similar equipment, are subject to the provisions of Chapter 41 of the *Residential Code of New York State*. For example:
  - Section 4102 contains requirements for wiring methods.
  - Section 4103 contains requirements for equipment locations and clearances.
  - Section 4104 contains requirements for the bonding of metallic parts, and permitted methods of bonding.
  - Section 4105 contains requirements for the grounding of equipment.
  - Section 4106 contains requirements for the installation of equipment.
  - Section 4107 contains special provisions for storable swimming pools.
  - Section 4108 contains special provisions for spas and hot tubs.
  - Section 4109 contains special provisions for hydromassage bathtubs.

State Energy Conservation Construction Code

The *State Energy Conservation Construction Code of New York State* (Energy Code) is promulgated by the Code Council pursuant to Article 11 of the Energy Law. The Energy Code is included provisions in Part 1240 of Title 19 of the NYCRR and in the publication mentioned in that Part. That publication is the *Energy Conservation Construction Code of New York State.*

Energy conservation requirements for residential and commercial swimming pools can be found in Chapters 4 and 5 of the Energy Code.

ENDNOTES

1. See 19 NYCRR Sections 1220.1(d)(7), 1221.1(d)(2), 1222.1(c)(1), 1228.2(b)(4), and 1228.4(b)(3).

2. See *Residential Code of New York State*, Appendix G, Section 105.2 and the definitions in *Residential Code of New York State*, Appendix G, Section 102.1. See also *Property Maintenance Code of New York State* Section 302.7.2.1, which provides that an approved enclosure, at least 4 feet in height, must be provided around outdoor swimming pools, so that such pools are inaccessible to children.

3. See Tarquini v. Town of Aurora, 77 N.Y.2d 354 (1991).

4. See *Residential Code of New York State*, Appendix G, Section 105.3.

5. See *Building Code of New York State* Section 3109.3.

6. See 19 NYCRR, Part 1228, Section 1228.4.

7. See 19 NYCRR, Part 1228, Section 1228.2.

8. See *Residential Code of New York State*, Appendix G, Section 106.

9. See *Residential Code of New York State*, Appendix G, Section 103.1.

10. See *Residential Code of New York State*, Appendix G, Section 103.2.

11. See *Property Maintenance Code of New York State* Section 302.7.2